HP Series

Pull Cylinders

HP Series - High-Tonnage Pulling

- High strength steel construction
- One piece high grade alloy bearing for side load protection and longer life
- Polyurethane cup seal provides optimum performance
- External rod threads and Internal base threads
- Used for pulling and tensioning
- Maximum working pressure: 10,000 psi / 700 bar
- Spring extend return

Related Product: Hoses

We offer a variety of hoses, fittings, lengths and materials.

pg 72

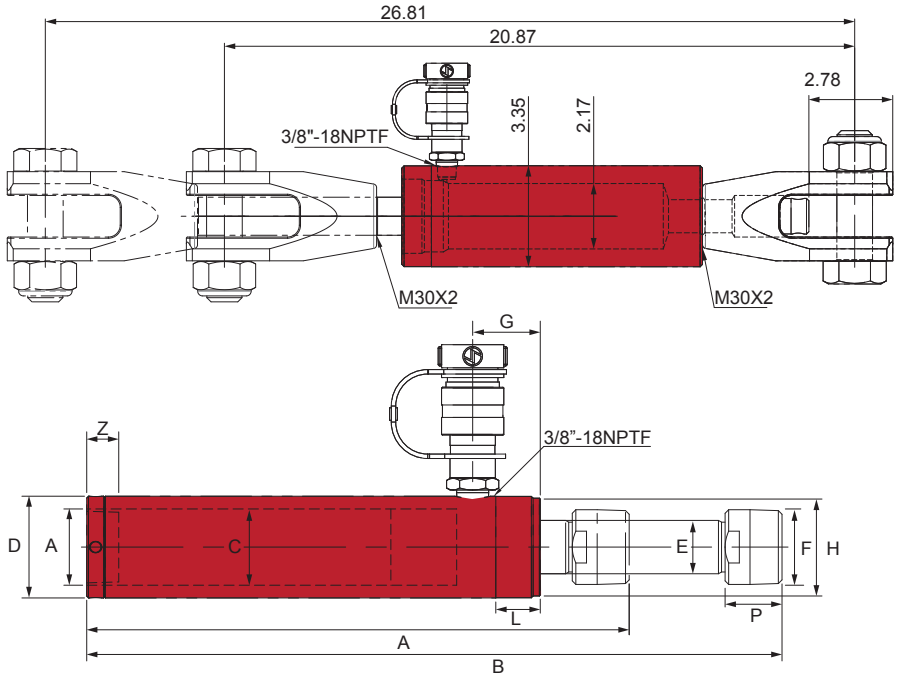

CP10

The CP10* comes was a male/female set. This clevis is designed to aid in pulling applications with all the HP series cylinders.

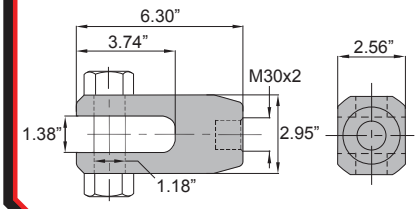

** CP10 only works with HP1006*

Cylinder Capacity (tons)	Stroke (in)	Model Number	Cylinder Effective Area (in^2)	Internal Pressure At Capacity (psi)	Oil Capacity (in^3)	Collapsed Height A (in)	Extended Height B (in)	Outside Dia. D (in)	Cylinder Bore Dia. C (in)	Top to Inlet Port G (in)	Collar	
											Thread H	Thread Length L (in)
2.5	5.00	HP0205	0.56	7,905	2.78	10.55	15.55	1.89	1.13	1.65	1½"-16UN	0.98
5	5.55	HP0505	1.14	8,772	6.34	11.93	17.48	2.25	1.69	1.50	2¼"-14UN	1.00
10	5.95	HP1006*	2.44	7,663	14.48	11.75	17.70	3.35	2.17	1.50	M85x2	1.00

Model Number	Adapter		Rod			Base Mounting Hole		Weight (lbs)
	Thread F (in)	Length P (in)	Dia. E (in)	Thread Length K (in)	Thread Q (mm)	Thread Y	Depth Z (in)	
HP0205	¾"-14NPTF	1.13	0.75	0.76	M16 x 1.5	¾"-14NPTF	0.72	6.4
HP0505	1¼"-11.5NPTF	1.25	1.18	0.93	M28 x 1.5	1¼"-11.5NPTF	0.95	9.3
HP1006*	-	-	1.26	1.02	M30 x 2	M30x2	0.98	20.9

** CP10 only works with HP1006*